BUMP OUT 10 Bi Parting Window

BUMP OUT 10 (BO10)

This classic bump out design offers a panoramic view of cars and outside activity. Convenience is key with over four feet of inside usable counter space and a large 18"W x 23"H service opening.

CHOOSE YOUR MODE OF OPERATION

◊ MANUAL OPEN / SELF CLOSE (BO10SC)

Manually open both doors with one hand. Doors part from the center and easily slide open to the sides. When released, doors close on a gravity fed track. Self latches every time it closes. Includes a thumb-turn lock, and night locking bar. Economical and easy to maintain.

◊ FULLY AUTOMATIC ELECTRIC (BO10E)

For hands free operation, the operator simply steps into a hip high electronic light beam which opens the door panels automatically. The door panels automatically close when the operator steps away from the electronic light beam. By the push of a button, operators can easily adjust the width of the window opening from 18”W to 12"W. Thumb-turn lock.

SIZE

Window Frame Size: 53 1/2"W x 48 3/4”H
Service Opening: 18”W x 23” H or 12”W x 23”H
Rough Opening: for Recess Mounting: 54” W x 49 1/4” H

STANDARD FEATURES:

- ◊ Anodized aluminum extrusions and stainless steel combine to give you an attractive window that will not rust, pit or weather
- ◊ Fully assembled, pre-glazed and ready to install
- ◊ 1/4” Clear Tempered Glass doors/sides
- ◊ Lexan tinted transom deflects moisture and reduces glare.
- ◊ Dark Bronze or Clear Anodized Aluminum
- ◊ Track free bottom sill with 4 feet of usable counter space.
- ◊ One year parts & labor limited warranty
- ◊ On-staff tech support / stocked parts / nationwide network of service providers.

OPTIONAL FEATURES

- ◊ Powder Coat Paint—Tiger Drylac
- ◊ Tinted Glazing
- ◊ 1/4” Hard Coat Low E Glass
- ◊ Telescoping Night Time Security Bar Set for additional security
- ◊ Restriction Panel or Screen
- ◊ Pharmacy Drawer (Model BO10-RX)

1815 Arthur Drive West Chicago, IL 60185 800.621.5045 630-876-7766 (fax) 630.876.7767
www.ready-access.com email: ready@ready-access.com

READY ACCESS®

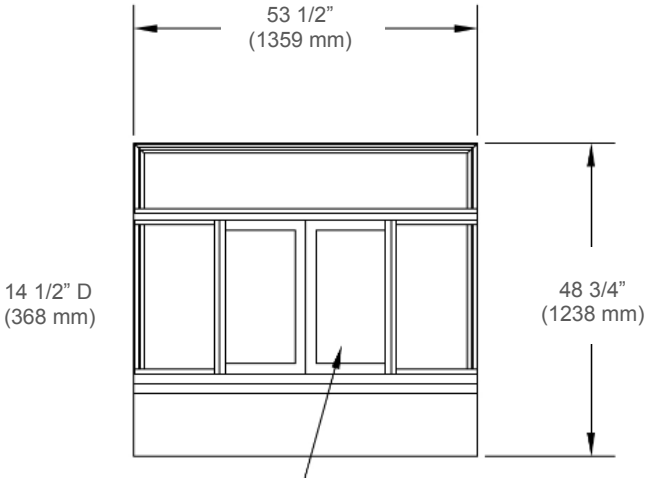

18"W x 23"H service opening,
adjustable to 12"W with touch of button.

All windows ship completely pre-assembled, fully glazed and ready to install.

Installation / Owners manual can be retrieved online:
www.ready-access.com

- ◊ Installation illustrations are for reference only. Construction conditions and local codes prevail.
- ◊ Must be installed level, square and plumb.
- ◊ Recommend approximately 36" from top of sill to interior finished floor (or per local code).
- ◊ 54" W x 49 1/4" H rough opening recommended for recess-mount application (most common). Projects approximately 10 1/4".
- ◊ Surface Mount Option: Optional surface mount hardware included for 50"W x 34 1/4"H rough opening. Projects approximately 14 1/4".

RECESS MOUNTING

(most common)
Rough Opening
54"W x 49 1/4"H
Set 23 1/4" from
interior finished floor
for 36" interior counter height.
(Local codes prevail)

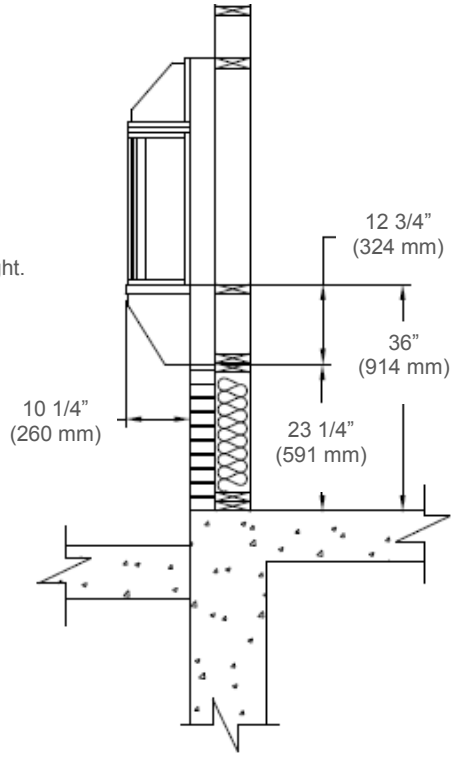

ELECTRIC REQUIREMENTS FOR WINDOW

Manual Open / Self Close Window:
No Power Required

Fully Automatic Electric:

115 vac—60Hz with a 15 amp dedicated circuit run power to bottom left (from outside view)

Doors part side-to-side so counter work area remains clear.

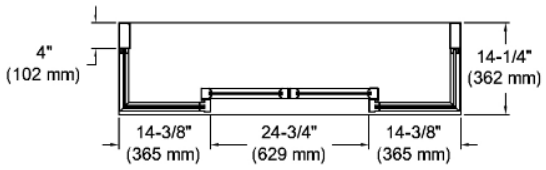

1815 Arthur Drive West Chicago, IL 60185 800.621.5045 630-876-7766 (fax) 630.876.7767
www.ready-access.com email: ready@ready-access.com